LOGAN ACTUATOR CO.

General Parts Catalog

Logan and Montgomery Wards Lathes

Replacement parts • Manuals • Accessories



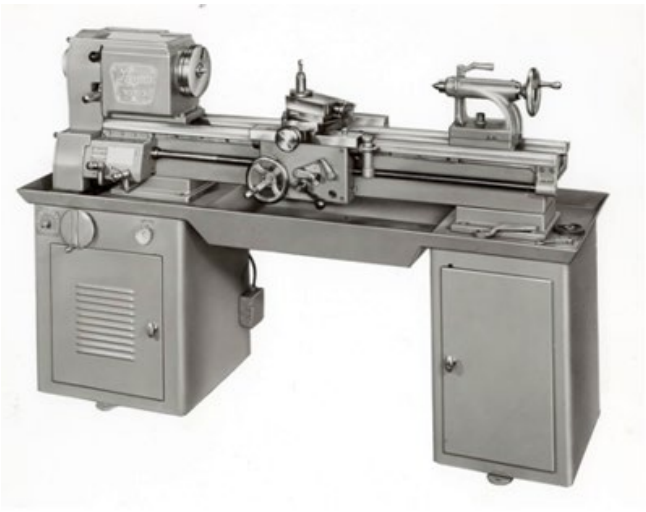

Logan Actuator Co.

store.lathe.com

550 Chippewa Road • Harvard, IL 60033 USA

Phone: (815) 943-9500

sales@lathe.com • www.lathe.com

HOW TO ORDER REPAIR PARTS

To help us fill your repair parts order promptly and correctly, please include:

1. The complete part name and number shown in the parts list.

2. Your lathe model and serial number. Look for the serial number at the right end of the lathe bed, between the V and flat ways.



Logan Actuator Co.

550 Chippewa Rd
Harvard, IL 60033
USA
Tel (815) 943-9500
http://www.lathe.com
sales@lathe.com
Secure Online Ordering:
http://store.lathe.com

LATHE PARTS CATALOG

This catalog covers parts for servicing and repairing lathes manufactured by Logan Engineering Co. in Chicago, Illinois, and sold under the Logan name and the Montgomery Wards Power-Kraft line.

With every order, include your lathe model number, serial number, and a daytime telephone number. The serial number is a four- or five-digit number, sometimes followed by an “A,” stamped at the right end of the bed between the V and flat ways.

Reprints of original Logan lathe instruction manuals and parts lists are also available, including exploded or sectional views of assemblies. Call for details or order at http://store.lathe.com. Be sure to specify your lathe model number.

Old Part Number identifies the number used in the original parts list for your lathe model.

Part Number identifies the corresponding LP- or Q- number used by Logan Actuator Co. Use the listed dimensions as an additional check when identifying a part.

Understanding part numbers
Logan used at least four part numbering systems during more than 40 years of lathe production. Logan Actuator Co. uses its own stock numbers, and this catalog cross-references the original Logan Engineering numbers. For example, if your number is 18A-30216, look for LA-216. If you need help matching a number, contact us with the numbers you have.

This catalog includes only a selection of the parts available. If you need an item that is not listed, contact us to check availability and price.

LATHE PARTS LISTING INDEX

PARTS GROUP	PAGE:
GEAR BOX GEARS, SHAFTS, ETC.	6
MISCELLANEOUS HEADSTOCK PARTS	8
BULL GEARS	9
PULLEY GEARS	10
BACK GEARS	10
SHIFTER RACK (For Back Gear)	11
SPINDLE GEARS	11
DRIVE PARTS	11
DRIVE BELTS	12
REVERSE GEAR BRACKETS	13
CHANGE GEAR STUDS AND BRACKETS	14
IDLER, REVERSE, STUD & CHANGE GEARS	15
HANDWHEELS AND HANDLES	16
CROSSFEED SCREWS AND NUTS	17
COMPOUND SCREWS AND NUTS	17
MITER GEARS	18
CROSSFEED GEARS	18
RACK PINION GEARS	18
RACKS	18
LEAD SCREWS	18
GEARS, APRON	19
APRON CLUTCH	19
MISCELLANEOUS APRON PARTS	20
HALF NUTS AND CAMS	20
MISCELLANEOUS SADDLE PARTS	21
GIBS	22
WAY WIPERS AND FELTS	22
TOOL POSTS	23
THREADING INDICATOR DIAL	24
TAILSTOCKS AND PARTS	25
FACE PLATES, DRIVE PLATES, CHUCK BACKS	26
FOLLOWER REST & CENTER (STEADY) REST	26
TURRET PARTS	27
CENTERS	28
ADAPTER SLEEVES	28
TAPER ATTACHMENT	29
COLLET ATTACHMENT	30
CARRIAGE STOPS	30
CHUCKS	31
METRIC THREADING INFORMATION	32
QUICK CHANGE TOOLPOSTS	34
TURNING TOOLS	35
PRECISION LEVELS	35
COLLET CHUCKS	36

QUICK CHANGE GEAR BOXES

General Diagram

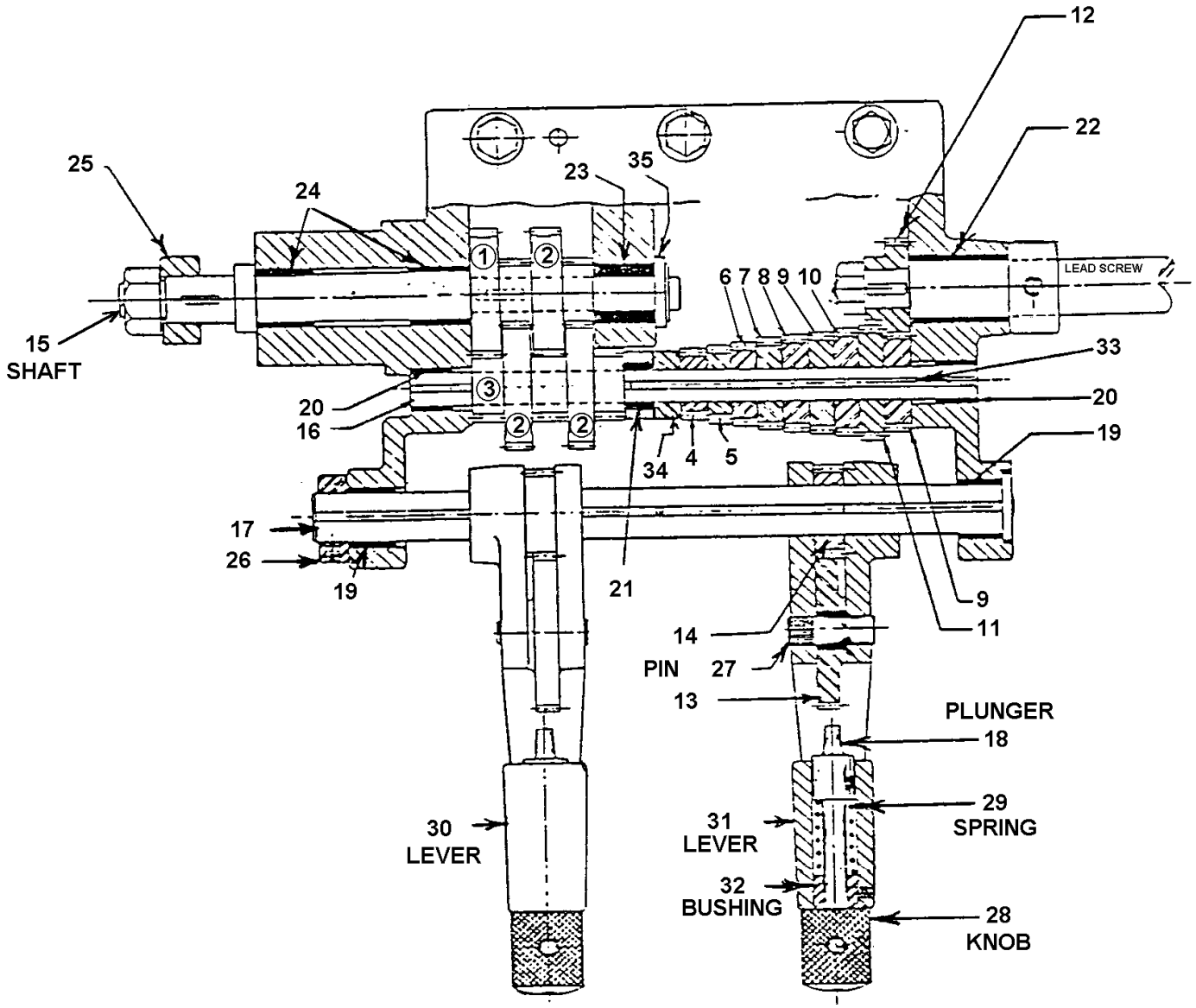

Illustration Numbers refer to the following pages with lists for the
LB-210, LA-1240-2, 2200, 6200, and LA-24-1 Quick Change Gear Boxes
and the Miscellaneous Parts for Gear Boxes

QUICK CHANGE GEAR BOXES

9", 10" 11" & 2900 Series 12" Lathes (20 D.P.)

Logan Lathe Assembly LB-210 & LA-1240-2 Gear Boxes

Illus. No.	Part Number	Old Part No.	No. of Teeth	O.D.	Width	Bore (*=with Bushing)
1	LP-1002	LA-1219A (L-1571)	32/16	1.7/0.9	0.765	0.438
2	LP-1076	LA-1220A (L-1572) (w/ Q14-00802)	32/16	1.7/0.9	0.765	0.438*
3	LP-1004	LA-1223 (L-1506) (w/ Q14-00801)	16	0.900	0.382	0.438*
4	LP-1005	LA-1225	16	0.900	0.382	0.438
5	LP-1006	LA-1226	18	1.000	0.313	0.438
6	LP-1007	LA-1227	20	1.100	0.313	0.438
7	LP-1008	LA-1228	22	1.200	0.313	0.438
8	LP-1009	LA-1229	23	1.250	0.313	0.438
9	LP-1010	LA-1230	24	1.300	0.313	0.438
10	LP-1011	LA-1231	26	1.400	0.313	0.438
11	LP-1012	LA-1232	28	1.500	0.313	0.438
12	LP-1013	LA-1233	24	1.300	0.563	0.500
13	LP-1014	LA-1213 (L-1438) (w/ Q14-03351)	40	2.100	0.370	0.375*
14	LP-1016	LA-1214	22	1.200	0.370	0.625 w/Key
15	LP-1100	LA-1217-1 (17A-31346)	Drive Shaft, 0.625 Dia. Drive End			
16	LP-1147	LA-1222 (17A-31222)	Stack Shaft, 0.437 Dia.			
17	LP-1146	LA-1215-1 (17A-31345)	Slider Shaft, 0.625 Dia.			

See Next Page for Illus. Number 18 through 35

2500 Series 12" & 14" Lathes (16 D.P.)

Logan Lathe Assembly 2200 & 6200 Gear Boxes

Illus. No.	Part Number	Old Part No.	No. of Teeth	O.D.	Width	Bore (*=with Bushing)
1	LP-1017	2219-A (L-1391)	32/16	2.13/1.13	0.982	0.563
2	LP-1020	2220-A (L-1392) (w/ Q14-01101)	32/16	2.13/1.13	0.982	0.563*
3	LP-1022	2223 (w Q14-01100)	16	1.125	0.483	0.563*
4	LP-1023	2225	16	1.125	0.437	0.563
5	LP-1024	2226	18	1.250	0.437	0.563
6	LP-1025	2227	20	1.375	0.437	0.563
7	LP-1026	2228	22	1.500	0.437	0.563
8	LP-1027	2229	23	1.562	0.437	0.563
9	LP-1028	2230	24	1.625	0.437	0.563
10	LP-1029	2231	26	1.750	0.437	0.563
11	LP-1030	2232	28	1.875	0.437	0.563
12	LP-1031	2233	24	1.625	0.592	0.563
13	LP-1032	2213 (w/ Q14-03351)	38	2.500	0.370	0.375*
14	LP-1033	2214	22	1.500	0.370	0.750 w/Key
15	LP-1160	2217	Drive Shaft, 0.625 Dia Drive End			
16	LP-1161	2222	Stack Shaft, 0.562 Dia.			
17	LP-1162	2215	Slider Shaft, 0.750 Dia			

See Next Page for Illus. Number 18 through 35

QUICK CHANGE GEAR BOXES

10" & 11" Lathes (16 D.P.)
Logan Lathe Assembly LA-24-1 Gear Boxes
To Serial Number 46561

Illus. No.	Part Number	Old Part No.	No. of Teeth	O.D.	Width	Bore (*=with Bushing)
1	LP-1137	LA-500-A	32/16	2.13/1.13	0.592	0.563
2	LP-1134	LA-502-A (w/ Q14-00788)	32/16	2.13/1.13	0.530	0.563*
3	LP-1148	LA-504 (w/ Q14-00789)	16	1.125	0.327	0.688*
4	LP-1158	LA-499	16	1.125	1.200	0.625
5	LP-1149	LA-491	18	1.250	0.281	0.625
6	LP-1150	LA-492	20	1.375	0.281	0.625
7	LP-1151	LA-490	22	1.500	0.281	0.625
8	LP-1152	LA-494	23	1.562	0.281	0.625
9	LP-1153	LA-493	24	1.625	0.281	0.625
9A	LP-1156	LA-505	24	1.625	0.312	0.625
10	LP-1154	LA-495	26	1.750	0.281	0.625
11	LP-1155	LA-496	28	1.875	0.281	0.625
12	LP-1157	LA-506	24	1.625	0.640	0.625
13	LP-1130	LA-497 (w/ Q14-00790)	40	2.625	0.495	0.438*
14	LP-1131	LA-498	22	1.500	0.495	0.750 w/Key
15	LP-1301	LA-474	Drive Shaft, 0.625 Dia Drive End			
16	LP-1300	LA-470	Stack Shaft, 0.625 Dia.			
17	LP-1129	LA-472-1	Slider Shaft, 0.750 Dia x 8-7/8" Long			

MISCELLANEOUS PARTS FOR GEAR BOXES

Illus. No.	Description	Small Gear Box LB-210 & LA-1240-2	Large Gear Box 2200 & 6200	Early Gear Box LA-24-1 (To S/N 46561)
18	Plunger	LP-1187 (LA-1207)	LP-1187 (LA-1207)	LP-1492 (LA-479)
19	Oilless Brg.	Q14-02531	Q14-00782	-------
20	Oilless Brg.	Q14-00790	Q14-00794	Q14-00787
21	Oilless Brg.	-------	Q14-00794	-------
22	Oilless Brg.	Q14-00617	Q14-00617	-------
23	Oilless Brg.	Q14-00800	Q14-00794	Q14-00794
24	Oilless Brg.	Q14-00621	Q14-00804	Q14-00617
25	Spacer	LP-1302 (LA-239)	LP-1302 (LA-239)	LP-1302 (LA-239)
26	Collar	LP-1264 (LA-996)	Washer LP-1395(2212)	(LA-319)
			Snap Ring Q15-00932	
27	Pin	LP-1193 (LA-1212)	LP-1193 (LA-1212)	(LA-483)
28	Knob	LP-1331 (LA-1210)	LP-1332 (2210)	LP-1650 (LA-480)
29	Spring	LP-1229 (LA-1208)	LP-1229 (LA-1208)	(LA-481-1)
30	Lever, L.H.	LP-1340 (LA-1203)	LP-1344 (2202)	(LA-478-1)
31	Lever, R.H.	LP-1341 (LA-1204)	LP-1344 (2202)	(LA-477-1)
32	Bushing	LP-1343 (LA-1209)	LP-1343 (LA-1209)	-------
33	Key	LP-1393 (LA-1234)	LP-1307 (2234)	(LA-471)
34	Spacer	LP-1191 (LA-1224)	LP-1306 (2224)	-------
35	Spacer	LP-1079 (6145)	LP-1369 (2221)	-------
	Thread/Feed Chart	LP-1785 (LA-1205)	LP-1949 (2206) 12”	LP-1785 (LA-508)
	End Guard	LP-1981 (LA-1202)	--------	--------
	Lever Assembly	LP-1415 (LA-1203 or LA-1204) **Specify L.H. or R.H.**		

HEADSTOCK, MISCELLANEOUS

See Also "Reverse Gears", "Brackets", "Back Gears", "Change Gears", "Bull Gears", "Spindle Gears", & "Adapter Sleeves")

Part Number	Old Part No.	Description
LP-1191	LA-1224	Spacer
LP-1219	LA-1022	Headstock Clamp (Rear)
LP-1223	LA-331	Hinge Block (Used with LP-1243)
LP-1238	LA-149	Stop Pin w/ Set Screw
LP-1243	LA-230	Hinge Pin
LP-1256	LA-664-1	Retaining Collar
LP-1257	LA-666	Take-Up Nut
LP-1258	LA-672	Grease Seal
LP-1259	LA-686	Take-Up Nut
LP-1276	LA-1011	Grease Seal
LP-1280	LA-510	Change Gear Bracket Stop
LP-1283	LA-663	Bearing Cover
LP-1294	LA-677	Spacer, 1-3/8" ID x 1-5/16
LP-1295	LA-678	Headstock Clamp (Front)
LP-1296	LA-226	Headstock Clamp (Rear)
LP-1303	LA-660	Spindle, 1-1/2" - 8 Th'd 12-3/4" Lg (800 & 1800 Series 10" Lathes)
LP-1304	LA-514	Knob for Gear Cover
LP-1310	LB-9	Spindle, 1-1/2" - 8 Th'd 9-27/32" Lg (9" Lathe)
LP-1337	6104	Cover Nut
LP-1347	LA-330	Hinge Bracket
LP-1355	LA-1007	Lock (Reverse Gear Handle)
LP-1356	LA-224	Hinge Pin for LP-1418
LP-1358	2040	Spring Anchor Pin (12" Lathes)
LP-1359	2039	Spring Anchor Pin (12" Lathes)
LP-1360	2038	Spring (12" Lathes)
LP-1361	2036	Shoulder Pin (12" Lathes)
LP-1405	LA-259	Take-Up Nut
LP-1406	LA-130-1	Retaining Collar
LP-1407	LA-132	Retaining Nut
LP-1409	LA-1019	Take-Up Nut
LP-1418	LA-117	Hinge Bracket for LP-1356 & Headstock Cover
LP-1449	LA-109-1	Spindle (Model 200 Series)
LP-1453	LA-384	Hinge Bracket (Snowshoe Cover)
LP-1454	LA-379	Hinge Pin
LP-1459	LA-1023	Hinge Bracket (Drive Box, 11" Lathes)
LP-1483	LA-131	Retaining Collar (Ward's Lathe)
LP-1582	2611	Brake Lever
LP-1583	2612	Brake Shoe (12" Lathes)
LP-1584	6009	Handwheel (12" Lathes)
LP-1586	2767	Pulley (12" Lathes)
LP-1638	LB-16	Belleville Washer
LP-1717	LA-1017	Spindle Spacer
LP-1795	8524	Belleville Washer (14" Lathe)
LP-1796	8525	Bearing Spacer
LP-1827	LA-657	Hinge Bracket (Drive Box, 10" Lathes)
LP-1843	LB-12	Take Up Nut (9" Lathe)
LP-1844	LB-5	Spindle Pulley (9" Lathe)
LP-1864	6090	Stud for Guard
LP-1933	6014, 7421	Lock Nut
LP-1934	6813	Lock Nut

HEADSTOCK, MISCELLANEOUS Continued

Part Number	Old Part No.	Description
LP-1935	6814	Lock Nut
LP-1936	6824	Collar
LP-1937	6825	Spacer
LP-1938	7417	Driver
LP-1943	LA-1012	Fiber Washer
LP-1947	LA-698	Belleville Washer
LP-1952	2027	Fiber Washer
LP-1954	LA-1015	Spacer
LP-2047	LA-1144	Spindle Cone Pulley, 4-Step V, 11” Lathes
LP-2071	2313-1	Draw Nut, L-00 Spindle
LP-2076	LA-1016	Belleville Washer
Q22-00634	0634	Rubber Bumper for Cover

BULL GEARS

Part Number	Old Part No.	No. of Teeth & Pitch	O. D.	Includes Pull Pin	Width	Bore
LP-1198	LA-120-1	72T., 14 D.P.	5.286	LP-1202	1.188	1.250
LP-1199	LA-654-2	72T., 14 D.P.	5.286	LP-1201	1.188	1.492
LP-1205	LA-120-2	72T., 14 D.P.	5.286	LP-1201	1.188	1.250
LP-1208	LA-1003	90T., 16 D.P.	5.750	LP-1201	1.250	1.875
LP-1221	LB-4	78T., 16 D.P.	5.000	LP-1083	1.063	1.492
LP-1374	LA-654	72T., 14 D.P.	5.286	-------	1.375	1.492
LP-1379	LA-28 Complete	72T., 14 D.P.	5.286	Incl. LP-1374, LP-1380, LP-1381, LP-1382		
LP-1556	6004	89T., 12 D.P.	7.583	-------	1.575	2.625
LP-1724	2004	82T., 14 D.P.	6.000	-------	1.250	2.375
LP-1083	LB-13	Pull Pin for LP-1221 (LB-4)				
LP-1200	LA-346	"U" Type Spring for Pull Pin				
LP-1201	LA-345	3/8" Dia. Pull Pin				
LP-1202		3/8" to 5/16" Dia. Pull Pin				
LP-1380	LA-676	Locking Lever for LP-1379				
LP-1381	LA-675	Locking Spring for LP-1379				
LP-1382	LA-673	Locking Pin for LP-1379				
LP-1789	7851	Pull Pin Bushing				
LP-1790	7850	Pull Pin Sleeve				
LP-1791	7849	Pull Pin				
LP-1860	6034	Spring Wire				
LP-1900	LA-248	Spring (Prior to S/N 37062)				

Notes:

LP-1198 Used on 200 Series Lathes prior to Serial No. 35721 and Wards Lathes prior to approx. 8000
LP-1199 Used on 800 & 1800 Series Lathes after Serial No. 37063
LP-1205 Used on 200 Series Lathes after Serial No. 35722 and Wards Lathes after approx. 8000
LP-1208 Used on 900 & 1900 Series Lathes
LP-1221 Used on 400, 1400, & 9B Series Lathes
LP-1374 Used on 800 Series Lathes prior to Serial No. 37063
LP-1379 Used on 800 Series Lathes prior to Serial No. 37063

PULLEY GEARS / CONE PINIONS

Part Number	Old Part Number	Teeth	Pitch	Tooth O. D.	Width Teeth	Width Total	Hub Dia.	Bore (*= w/Bush.)
LP-1082	LA-119 (To S/N 22055)	30T	14	2.286	0.625	1.375	1.750	1.250
LP-1163	LA-656 (w/Q14-00781)	30T	14	2.286	0.625	1.375	1.938	1.492*
LP-1165	LA-119-1 (w/Q14-00793)	30T	14	2.286	0.625	1.375	1.938	1.250*
LP-1166	LA-1013 (w/Q14-00805)	40T	16	2.625	0.625	1.813	5.500	1.875*
LP-1203	LA-656-1 (w/Q14-00781)	30T	14	2.286	0.625	1.375	2.125	1.492*
LP-1467	LA-688 (w/Q14-00781)	30T	(Same as LP-1203, but with Lugs)					
LP-1555	7415	40T	12	3.500	1.000	1.625	4.625	2.563
LP-1939	2026	40T	14	3.000	.875	2.313	2.625	2.000*

BACK GEARS AND MISCELLANEOUS PARTS

Part Number	Old Part Number	No. Teeth	Pitch	O.D.	Width	Bore
LP-1119	LB-21	68/26	16 D.P.	4.375	3.660	0.750
LP-1168	LA-123	70	14 D.P.	5.143	0.563	1.188
LP-1172	2009 (To S/N 70503)	62	14 D.P.	4.571	0.750	0.625
LP-1181	LA-129	24	16 D.P.	1.625	0.438	0.500
LP-1182	LA-124	28	14 D.P.	2.143	0.563	1.188
LP-1192	LA-1006/18C-39082	80/30	16 D.P.	5.125	5.218	0.875
LP-1416	2322 (From S/N 70503)	62	14 D.P.	4.571	1.165	0.875 (12")
LP-1417	2321 (From S/N 70503)	20	14 D.P.	1.571	1.313	0.875 (12")
LP-1528	6037	75	12 D.P.	6.417	1.500	1.125 (14")
LP-1529	6038	26	12 D.P.	2.333	1.625	1.125 (14")
LP-1723	2030 (To S/N 70503)	20	14 D.P.	1.571	0.875	0.625 (12")
LP-1209	LA-1020	Eccentric Shaft Bushing (11" Lathe)				
LP-1232	LA-125	Eccentric Shaft for Quill				
LP-1233	LA-126	Quill for Back Gear				
LP-1234	LA-127 (w/Q14-00614)	Bushing, 0.625 Lg. (For LP-1232)				
LP-1235	LA-128 (w/Q14-00614)	Bushing, 1.438 Lg. (For LP-1232)				
LP-1358	2040	Spring Anchor Pin (12" & 14" Lathes)				
LP-1359	2039	Spring Anchor Pin (12" & 14" Lathes)				
LP-1360	2038	Spring (12" Lathes)				
LP-1361	2036	Shoulder Pin (12" Lathes)				
LP-1375	LA-56	Shifter Rack Assembly (See also Page 11)				
LP-1735	6036	Back Gear Quill				
LP-1736	6039	Back Gear Shaft				
LP-1847	LB-22-1	Eccentric Handle w/ Pin				
LP-1848	LB-24-1	Back Gear Shaft				
LP-1849	LB-23-1	Bearing				
LP-1850	LB-19	Collar				

SHIFTER RACK ASSEMBLY

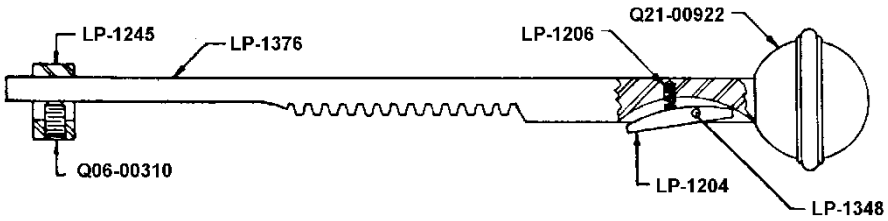

Part Number	Old Part No.	Description
LP-1204	LA-264	Latch Key
LP-1206	LA-238	Latch Spring
LP-1245	LA-243	Collar w/ Set Screw Q06-00310
LP-1348	LA-275	Pin for Latch
LP-1375	LA-56	Shifter Rack Assembly Complete as Shown
LP-1376	LA-241	Rack
Q21-00922	0922	Ball Knob Handle

SPINDLE GEARS

Part Number	Old Part Number	Teeth and Pitch	O.D.	Width	Bore
LP-1120	2025 (12" Lathe)	42T. 16 D.P.	2.750	0.688	2.000
LP-1123	LA-215-1 / 8309	30T. 16 D.P.	2.000	0.656	1.125
LP-1124	LA-1018	46T. 20 D.P.	2.400	0.699	1.750
LP-1197	LA-665-1 (18A-31337)	30T. 16 D.P.	2.000	0.656	1.313
LP-1458	7418	48T. 16 D.P.	3.125	1.250 / 0.688	2.250

DRIVE PARTS

See Also Drive Belts, Page 12

Part Number	Old Part No.	Description
LP-1101	LA-339	Counter Shaft, 3/4" Dia x 10-3/8" Lg.
LP-1169	LA-317	Counter Shaft, 3/4" Dia x 11-1/8" Lg.
LP-1269	LA-658	Rubber Bushing, 1-3/8" x 1" x 13/16" Lg. (See also LP-1459 Hinge Bracket)
LP-1271	LA-364	Cover Spring Catch
LP-1273	LA-307L	Head, L.H. For Center Shaft Adjusting Rod
LP-1274	LA-307R	Head, R.H. For Center Shaft Adjusting Rod
LP-1275	2294	Adjusting Rod
LP-1324	LA-318	Bearing w/ Q14-00804 & Q19-01147
LP-1338	6872	Gear, 74T, 16 D.P., For Speed Indicator
LP-1339	6871	Gear, 14T, 16 D.P., For Speed Indicator
LP-1413	LA-339	Pin For Pivots
LP-1453	LA-384	Cover Hinge Bracket (Snowshoe)
LP-1454	LA-379	Cover Hinge Pin
LP-1459	LA-1023	Hinge Bracket (Drive Box) Used with LP-1269
LP-1526	LA-366	Adjusting Screw, 3/8-16, w/Nut
LP-1551	LA-1037	Motor Pulley, 2 Step Specify Bore Size *Must be used with LP-1697*
LP-1561	LA-387	Adjusting Screw (Drive Support)
LP-1562	LA-936	Cam Stud
LP-1651	2126	Rod Bracket

DRIVE PARTS Continued

Part Number	Old Part No.	Description
LP-1659		Countershaft Bracket Ass'y w/ Ball Bearings & Shaft
LP-1672	2171	Motor Pulley **Specify Bore**
LP-1684	Q22-00647	Rubber Foot for LP-1561
LP-1697	LA-1036	Countershaft Drive Pulley *Must be used with LP-1551*
LP-1701	2444	Pulley Center (For LP-1830) *Recommend ordering LP-1830 Complete*
LP-1702	2447	Shaft (For LP-1830) *Recommend ordering LP-1830 Complete*
LP-1748	LB-102	Countershaft 3/4" Dia. x 8-3/4" Lg.
LP-1805	LB-99	Countershaft Pulley (2 Step)
LP-1806	LB-100	Countershaft Pulley (3 Step)
LP-1807	LB-101	Motor Pulley (2 Step) **Specify Bore**
LP-1830	2453	Variable Speed Pulley Ass'y, 6" Dia. (For 1" Wide Belt)
LP-1832	LB-38	Hinge Pin for Cover
LP-1841	LA-603	Countershaft Pulley (3 Step V, for 10" Lathe)
LP-1865	6865	Motor Pulley (14" Lathe w/ 1-3/16" Wide Belt) **Specify Bore**
LP-1868	6271	Motor Pulley (14" Lathe w/ 1" Wide Belt) **Specify Bore**
LP-1885	LA-349	Motor Pulley (2 Step) **Specify Bore** *Must be used with LP-1886*
LP-1886	LA-912	Countershaft Pulley (2 Step) *Must be used with LP-1885*
LP-1944	2141	Drive Shaft (Cabinet Drive)
LP-1950	LA-382	Stay Bar
LP-1958	LA-365	Shoulder Pin
LP-1959	LA-367	Shoulder Pin
LP-1998	6616	Variable Speed Pulley Ass'y, 7-1/4" Dia. (For 1-3/16" Wide Belt)
LP-2011	6602	Pulley Center (For LP-1998) * Recommend ordering LP-1998 Complete*
LP-2013	6606	Shaft (For LP-1998) * Recommend ordering LP-1998 Complete*

DRIVE BELTS

FLAT BELTS

Part Number	Old Part No.	Size	Comments	For Lathe
LP-1183-?	LA-679	1” x 39”	Part No. ending with “-1” indicates a flat belt with metal connecting clip; “-2” indicates an endless belt	10” Bench & Floor Models
LP-1184-?	LA-916	1” x 38”		10” Cabinet Models
LP-1185-?	LA-1038	1” x 40”		11” Bench/Floor Models
LP-1186-1	LA-1086	1” x 53½”		11" Cabinet Models

NOTE: Unless otherwise specified, Flat Belt with connecting clip will be furnished

V-BELTS

Part Number	Old Part No.	Size	Comments	For Lathe
Q25-03619	LB-8	1/2" x 46"		9" Lathes
Q25-03618	LB-105	1/2" x 31"		9" Lathes
Q25-03634	LA-388	1/2" x 51"		10" Floor Models
Q25-03464	LA-390	1/2" x 40"		10" & 11" Lathes
Q25-03643	LA-935	1/2" x 45"		10" Cabinet Lathes
Q25-03484	LA-1146	5/8" x 42"		11" Bench & Floor
Q25-03640	2129	5/8" x 29"		10", 11", &12"
Q25-03642	2140	5/8" x 40"		Cabinet Models
Q25-03586	2150	1/2" x 50"		11" Cabinet Lathes
Q25-03528	2173	1" x 61-1/4"	Variable Speed	#2500-V
Q25-03527	2174	1" x 39-1/4"	Variable Speed	#2500-V, #6500
Q25-03585	6274	1" x 70-3/4"	Variable Speed	#6500
Q25-03583	6862	1-3/16" x 39-3/8"	Variable Speed	#6530/6565
Q25-03584	6863	1-3/16" x 72"	Variable Speed	#6530/6565
Q25-02096		1-3/16" x 41-1/8"	Variable Speed	#7525
Q25-02097		1-3/16" x 69-3/8"	Variable Speed	#7525

REVERSE GEAR BRACKETS, SHAFTS, ETC.

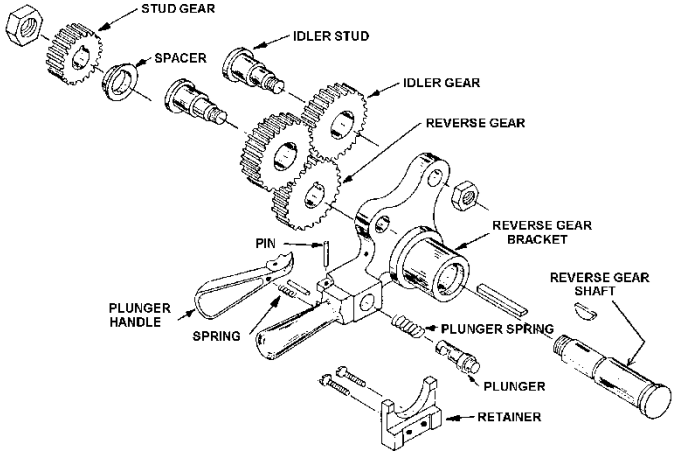

(For Gears, See "Idler, Reverse, Stud, and Change Gears")

Part Number	Old Part No.	Description
LP-1167	LA-144	Reverse Gear Stud
LP-1207	LA-138	Reverse Gear Shaft
LP-1216	LA-145	Plunger Lever Pivot Pin
LP-1231	LA-139	Reverse Gear Bracket Plunger Lever
LP-1236	LA-136	Reverse Gear Plunger Spring
LP-1237	LA-140	Plunger *Not Avail., Use LP-1581*
LP-1265	LA-135	Plunger Lever Spring
LP-1355	LA-1007	Bracket Retainer (Lock)
LP-1388	2054	Pinion Stud
LP-1389	LA-261	Spacer for Reverse Gear Shaft
LP-1390	2076	Reverse Gear Shaft
LP-1419	6068	Plunger Lever for LP-1491
LP-1422	LA-137-2	Reverse Gear Bracket (10" Lathe)
LP-1478	LA-1026	Reverse Gear Bracket (11" Lathe)
LP-1491	6841	Reverse Gear Bracket (6530, 6565 & 7500 14" Lathe)
LP-1527	6844	Position Plate (14" Lathe [For LP-1491])
LP-1531	6066	Reverse Gear Bracket (Light 14" Lathe)
LP-1532	6067	Position Plate (For LP-1531)
LP-1557	6069	Bracket Retainer (14" Lathe)
LP-1579	2077	Reverse Gear Bracket (2500 Series 12" Lathe)
LP-1580	2008	Plunger Lever (For LP-1579)
LP-1581	LA-140-2 (36A-31312)	Plunger
LP-1654	LB-33	Reverse Gear Shaft (9" Lathe)
LP-1655	LB-29	Reverse Gear Bracket (9" Lathe)
LP-1696	LA-4-2	Reverse Gear Assembly
LP-1714	LB-32	Pinion Stud (9" Lathe)
LP-1942	LB-28	Reverse Gear Assembly (9" Lathe)
LP-1953	6008	Stop Pin
LP-2028	2078	Square Key

CHANGE GEAR STUDS AND BRACKETS

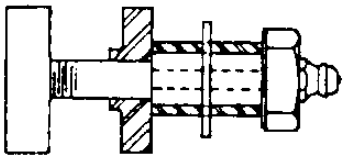

Part Number	Part of LP-1546	Part of LP-1547	Old Part No.	Description
LP-1122		X	6054	Bushing
LP-1195	X		LA-231	Bushing
LP-1196	X		LA-249	Key
LP-1247	X		LA-312	Nut
LP-1305	X		LA-786	Stud
LP-1349			LA-227	Change Gear Bracket (Hub 1-1/2" Thick)
LP-1386		X	6057	Washer
LP-1387		X	6058	Collar
LP-1392	X		LA-787	Spacer
LP-1397			6047	Spacer
LP-1403		X	6048	Key
LP-1404			6049	Washer, 1-3/8 x 1/2 x 1/8
LP-1411	X		LA-232	Washer, 1-1/8 x 1/16
LP-1530			6051	Change Gear Bracket (14" Lathes)
LP-1546				Stud Ass'y (9", 10", 11" & 2900 Series 12")
LP-1547				Stud Ass'y (2500 Series 12" & 14")
LP-1548		X		Change Gear Stud
LP-1549		X		Spacer
LP-1550		X		Nut
LP-1835		X		Washer
LP-1554			LA-476	Change Gear Bracket (Hub 1-1/4" Tk.)
LP-1587			2244	Change Gear Bracket (12" Lathes)
LP-1588			LA-517	Adjusting Bracket w/Pin, Washer, & Spacer
LP-1589			2264	Pin (For LP-1588)
LP-1590			2266	Washer (For LP-1588)
LP-1591			2265	Spacer (For LP-1588)
LP-1766			LB-236	Change Gear Bracket (9" Lathe w/ Quick Change)
LP-1797			LB-27	Change Gear Bracket (9" Lathe w/o Quick Change)
LP-2027			6046	Hanger

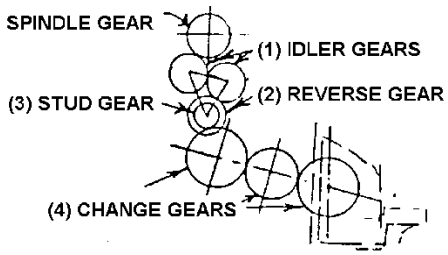

IDLER, REVERSE, STUD AND CHANGE GEARS

Illus. Number	Part Number	Old Part Number	No. of Teeth	O. D.	Width	Bore (*=with Bushing)
"LB", 9" LOGAN LATHES (20 D.P.)						
1	LP-1080	LB-30	36	1.900	0.437	0.625*
2	LP-1194	LB-31	23	1.250	0.437	0.625
10" LATHES (16 D.P.)						
1	LP-1034	LA-216 (w/Q14-00616)	30	2.000	0.563	0.625*
2	LP-1035	LA-217	30	2.000	0.563	0.625
10", 11" & 2900 SERIES 12" LATHES (16 D.P.)						
3 or 4	LP-1036	LA-200	16	1.125	0.438	0.625
4	LP-1037	LA-201	18	1.250	0.438	0.625
3 or 4	LP-1038	LA-202	24	1.625	0.438	0.625
4	LP-1039	LA-203	32	2.125	0.438	0.625
3 or 4	LP-1040	LA-204	36	2.375	0.438	0.625
4	LP-1041	LA-205	40	2.625	0.438	0.625
4	LP-1042	LA-206	44	2.875	0.438	0.625
4	LP-1043	LA-207	46	3.000	0.438	0.625
3 or 4	LP-1044	LA-208	48	3.125	0.438	0.625
4	LP-1045	LA-209	52	3.375	0.438	0.625
4	LP-1046	LA-210	54	3.500	0.438	0.625
4	LP-1047	LA-211	56	3.625	0.438	0.625
4	LP-1048	LA-212	60	3.875	0.438	0.625
3 or 4	LP-1049	LA-213	64	4.125	0.438	0.625
3 or 4	LP-1050	LA-214	72	4.625	0.438	0.625
4	LP-1051	AC-135	20	1.375	0.438	0.625
4	LP-1052	AC-136	22	1.500	0.438	0.625
4	LP-1053	AC-137	26	1.750	0.438	0.625
4	LP-1054	AC-138	28	1.875	0.438	0.625
4	LP-1055	AC-139	80	5.125	0.438	0.625
4	LP-1056	AC-140	100	6.375	0.438	0.625
4	LP-1057	AC-141	127	8.063	0.438	0.625
4	LP-1058	AC-186	39	2.563	0.438	0.625
4	LP-1059	AC-187	42	2.750	0.438	0.625
4	LP-1060	AC-188	66	4.250	0.438	0.625
4	LP-1665		37	2.438	0.438	0.625
4	LP-1666		47	3.063	0.438	0.625

11" LATHE (20 D.P.)

Illus. Number	Part Number	Old Part Number	No. of Teeth	O.D.	Width	Bore (*=with Bushing)
1	LP-1061	LA-1027 (w/Q14-00616) (M-1355)	34	1.800	0.563	0.625*
2	LP-1062	LA-1028	46	2.400	0.563	0.625
3	LP-1040	LA-204 (16 D.P.)	36	2.375	0.438	0.625

12" & 14" LATHES (16 D.P.) (Except 6530, 6565, & 7500 Series)

Illus. Number	Part Number	Old Part Number	No. of Teeth	O.D.	Width	Bore (*=with Bushing)
1	LP-1063	2051 (w/Q14-01357) (M-1238)	28	1.875	0.625	0.625*
2	LP-1064	2052	42	2.750	0.625	0.625

6530, 6565, & 7500 SERIES 14" LATHES (16 D.P.)

Illus. Number	Part Number	Old Part Number	No. of Teeth	O.D.	Width	Bore (*=with Bushing)
1	LP-1065	6842 (w/Q14-00616) (M-1233)	36	2.375	0.625	0.625*
2	LP-1066	6843	48	3.125	0.625	0.625

2500 SERIES 12" & 14" LATHES (16 D.P.)

Illus. Number	Part Number	Old Part Number	No. of Teeth	O.D.	Width	Bore (*=with Bushing)
3	LP-1067	2247	30	2.000	0.625	0.625
3 or 4	LP-1068	2248	60	3.875	0.625	0.625
4	LP-1069	6059	60	3.875	0.625	0.938
3	LP-1070	2252	54	3.500	0.625	0.625
4	LP-1071	2255	100	6.375	0.625	0.938
4	LP-1072	2256	127	8.063	0.625	0.938
3	LP-1073	2253	66	4.250	0.625	0.625
3	LP-1074	2251	39	2.563	0.625	0.625
3	LP-1075	2254	72	4.625	0.625	0.625
3 or 4	LP-1414	2249	64	4.125	0.625	0.625
4	LP-1667		37	2.438	0.625	0.938
4	LP-1668		47	3.063	0.625	0.938

HAND WHEELS AND HANDLES

Part Number	Old Part No.	Outside Diameter	Bore
LP-1510	LA-335, LB-49	2-3/8"	0.313
LP-1511	LA-299	3"	0.375
LP-1512	LA-121	4"	0.375
LP-1513	LA-122	5"	0.500
LP-1539	LA-1096	5"	0.375
LP-1542	8713	6-3/8"	0.500
LP-1685	2281	3-1/16"	7/16-40 Th'd
LP-1739	2087	2-5/16"	3/8-40 Th'd
LP-1945	6168	6-1/2"	0.500

HANDLES FOR ABOVE HANDWHEELS

Part Number	Description
Q21-03345	1/4" Shank
Q21-03614	5/16" Shank

CROSSFEED SCREWS AND NUTS

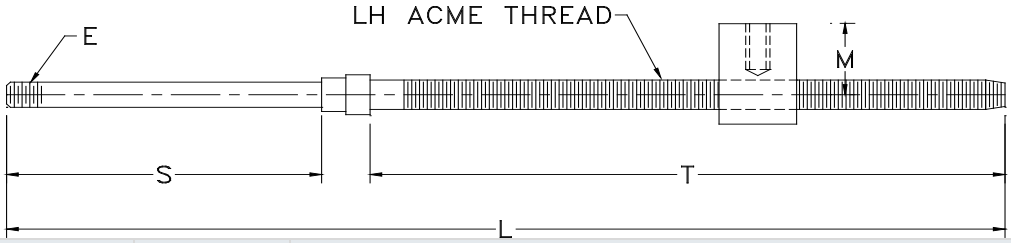

Crossfeed Screw	Crossfeed Nut	L.H. Acme Thread	ALL DIMENSIONS IN INCHES				
			L	S	T	E	M
LP-1099+ (LA-153)	LP-1094£ (LA-173)	7/16-10	12-7/8	4-1/16	8-3/16	3/8-24	0.734
LP-1099+ (LA-153)	LP-1095 (LA-173-1)	7/16-10	12-7/8	4-1/16	8-3/16	3/8-24	0.745
LP-1099+ (LA-153)	LP-1096 (LA-1062)	7/16-10	12-7/8	4-1/16	8-3/16	3/8-24	1.057
LP-1105@ (LA-798)	LP-1095 (LA-173-1)	7/16-10	14-1/4	4-1/4		3/8-24	0.745
LP-1105@ (LA-798)	LP-1096 (LA-1062)	7/16-10	14-1/4	4-1/4		3/8-24	1.057
LP-1106 (LA-1154)	LP-1097 (LA-1163)	7/16-10	13-15/16	5-7/16		Tapped 1/4-28	1.307
LP-1107 (2283)	LP-1098 (2083)	7/16-10	13-15/16	5-7/16	9-13/16	7/16-40	0.963
LP-1178 (6137)	LP-1179 (6133)	5/8-10	17-19/32	4-1/32		7/16-40	0.887
LP-1329# (2368)	LP-1098 (2083)	7/16-10	18-3/8	8-7/16	9-3/4	5/16-24	0.963
LP-1451 (LB-142)	LP-1450 (LB-141)	7/16-10	12-3/16	3-11/16		3/8-24	0.806
LP-1534 (LB-63)	LP-1535 (LB-50)	7/16-10	12-3/16	4-1/4	6-7/8	3/8-24	0.677
LP-1540# (6334)	LP-1179 (6133)	5/8-10	20-13/16	8-1/2	12-5/16	5/16-24	0.887
LP-1608 (7598)	LP-1610 (7438)	3/4-10	20-5/8	3-3/8	11-11/16	9/16-18	0.938

LP-1541 - Sleeve for LP-1540

Notes: # For Telescopic Taper Attachment; + Prior to Serial #71060;
@ After Serial #71060; £ Prior To Serial #17151

COMPOUND SCREWS AND NUTS

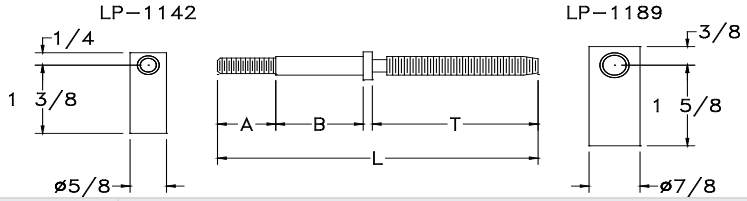

Compound Screw	Compound Nut	R.H. Acme Thread	ALL DIMENSIONS IN INCHES			
			L	B	T	A
LP-1141 (LA-799)	LP-1142 (LA-697)	3/8-10	5-1/4	1-5/16	2-27/32	15/16
LP-1140 (LA-152)	LP-1142 (LA-697)	3/8-10	5-7/16	1-1/2	2-27/32	15/16
LP-1170 (2088)	LP-1142 (LA-697)	3/8-10	5-13/16	1-5/16	2-5/8	1-1/2
LP-1188 (6215)	LP-1189 (6216)	1/2-10	7-7/8	2-9/16	4-23/32	1/2
LP-1904 (LA-1171)	LP-1142 (LA-697)	3/8-10	5-7/8	2-13/16	2-1/2	-----
	LP-1412 (LA-178)†	Compound Rest Nut (Rectangular) 3/8-10 R.H. Acme 0.500 C.L. Height (Prior to S/N 32073)				

MITER GEARS

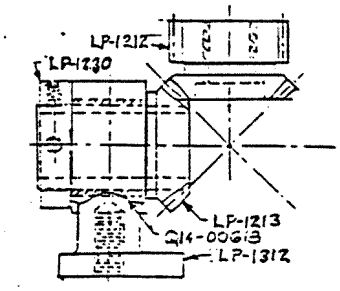

Part Number	Old Part No.	Description
LP-1212	LA-188	Gear w/ Bushing & Spur Gear
LP-1213	LA-189	Gear w/ Key
RECOMMEND ABOVE 2 ITEMS BE ORDERED TOGETHER		
LP-1230	LA-256	Collar w/ 2 of Q06-00309
LP-1312	LA-196	Bearing w/ Q14-00618

CROSSFEED GEARS

Part Number	Old Part Number	Teeth and Pitch	O.D.	Width	Bore
LP-1115	LA-190	16T. 16 D.P.	1.125	0.328	0.500
LP-1116	LA-796	16T. 16 D.P.	1.125	1.625	0.430
LP-1125	LA-1160	16T. 16 D.P.	1.125	0.625	0.430
LP-1180	6136	18T. 16 D.P.	1.250	0.813	0.618
LP-1477	LB-143	16T. 20 D.P.	0.900		0.430
LP-1609	6453	18T. 16 D.P.	1.250	1.500	0.740

RACK PINION GEARS

Part Number	Old Part Number	Teeth and Pitch	O.D.	Width	Bore
LP-1118	LB-68	12T. 16 D.P.	0.875	0.625	w/ 9/16 Shaft
LP-1164	LA-155-1, 18A-31363	33/16T. 16 D.P.	2.19/1.13	.438/.562	0.500
LP-1214	LA-155	33/16T. 16 D.P.	1.875	.438/.562	0.500
LP-1268	LA-548-1	16T. 16 D.P.	1.125		w/ 5/8 Shaft
LP-1286	LA-548	16T. 16 D.P.	1.125	1.344	0.500
LP-1309	LB-161	40/16T. 20/16 DP	2.10/1.13	2.063	0.625
LP-1732	7749 (From S/N 78979)	15T. 12 D.P.	1.417		w/ 5/8 Shaft
LP-1907	6182 (To S/N 78979)	15T. 12 D.P.	1.417		w/ 5/8 Shaft

RACKS

Part Number	Old Part No.	Description
LP-1629	LB-92	For "LB", 9" Lathes 18-13/16" Lg.
LP-1630	LA-154	For Model 825 26-13/16" Lg.
LP-1631	LA-1069	For Model 922 38-15/16" Lg.

LEAD SCREWS

Part Number	Old Part No.	Description
LP-1946	LA-1235	For 10" Short Bed Lathe w/QC Gear Box

GEARS, APRON

Part Number	Old Part No.	Description
LP-1215	LA-191	Idler Shift Gear, 35T. 16 D.P.
LP-1252	LA-522-1A, L-1423	Double Gear, 46/20T. w/Q14-00784
LP-1260	LA-763	Sleeve Gear, 35T. 20 D.P., Spline Shaft
LP-1267	LA-547-1	Gear, 55T. x 5/8" Bore, w/Keyway
LP-1285	LA-547	Gear, 44T. x 1/2" Bore, w/Keyway
LP-1287	LA-556	Gear, 40T. 16 D.P. w/Q14-00783
LP-1288	LA-556-1	Gear, 50T. 20 D.P. w/Q14-00783
LP-1289	LA-550	Handle Gear, 20T. 16 D.P.
LP-1290	LA-550-1	Handwheel Shaft Gear, 15T. 20 D.P. 5/8" Bore
LP-1291	LA-551-1	Double Gear, 46/16T. 16 D.P. w/Q14-00784
LP-1313	LB-69	Gear, 38T. 20 D.P. 9/16" Bore
LP-1482	LA-158	Handwheel Pinion & Shaft, 16T. 16 D.P. 2-15/16 Lg.
LP-1497	6185, L-1648	Double Gear, 62/30T. 16/20 D.P. 3/8" Bore
LP-1673	LB-70	Handwheel Pinion & Shaft, 14T. 20 D.P. (#400 & #1400 Lathe)
LP-1733	7753	Handwheel Pinion, 16T. 20 D.P. (14" Lathe)

APRON CLUTCH

Part Number	Old Part No.	Description
LP-1251	LA-539	Thrust Ring
LP-1261	LA-766	Retainer
LP-1262	LA-764	Shaft
LP-1263	LA-765	Spring
LP-1281	LA-521	Clutch Disc (Outside Lobes)
LP-1282	LA-522	Clutch Disk (Inside Spline)
LP-1352	LA-760	Friction Washer
LP-1519	LA-562-1	Worm, for 10", 11" &12" Lathes (From S/N 27623 to 67012)
LP-1520	LA-532	Worm Wheel (Straight Bore from S/N 27623)
LP-1559	LA-534	Worm Wheel (Tapered Bore to S/N 27623)
LP-1560	LA-533	Clutch Cone
LP-1564	LA-767	Belleville Washer
LP-1573	2271	Worm, 12" Lathes (From S/N 67012)
LP-1632	LA-536	Worm Wheel Bearing
LP-1730	6251	Worm Wheel (14" Lathe)
LP-1731	7751	Worm (14" Lathe after S/N 78626)
LP-1751	LA-566	Sleeve Gear (Prior to S/N 27623)
LP-1752	6192	Worm (14" Lathe to S/N 78626)
LP-1758		Spacer (Use with LP-1519 in Lieu of LP-1759)
LP-1759	LA-562	Worm (Prior to S/N 27623)
LP-1760	LA-561	Worm Washer (Prior to S/N 27623)
LP-1826	6167	Worm Bearing Oiler (14" Lathe to S/N 78626)
LP-1834	LA-761A	Lever & Hub Ass'y
LP-1871	LA-520	Sleeve Gear (Prior to S/N 50843)
LP-1916	LA-531-1	Clutch Knob, Tapped 3/8-24
LP-1920	LA-531	Clutch Knob, 5/16 Hole
Q13-00679	0679	Ball Thrust Bearing (For Clutch)

APRON, MISCELLANEOUS
(See Also "Clutch Parts", "Half Nuts", "Apron Gears", "Miter Gears", "Rack Pinion Gears")

Part Number	Old Part No.	Description
LP-1218	LA-164	Cam Shaft Lever w/ Handle
LP-1220	LA-530	Shift Lever
LP-1225	LA-564	Shift Lever Spring
LP-1226	LA-560	Shift Lever Knob
LP-1227	LA-577	Shift Lever Plunger
LP-1228	LA-558	Lock
LP-1255	LA-565	Worm Bushing (From S/N 27623)
LP-1270	2137	Key, 3/16" Sq. x 1-1/4" Lg.
LP-1279	LA-559	Lock Guide
LP-1284	LA-546	Shaft, 1/2" x 3-3/16" Lg.
LP-1298	LA-298	Key, 3/16" Sq. x 3/8" Lg.
LP-1314	LA-220	Key, 5/32" Sq. x 1/2" Lg.
LP-1408	LA-527-1	Half Nut Plate
LP-1461	2273	Worm Bearing (From S/N 67012)
LP-1543	LA-156-1	Rack Pinion Stud
LP-1558	LA-549	Handwheel Shaft
LP-1563	LA-192-1	Idler Shift Shaft
LP-1637	LA-544	Eccentric w/ Stud
LP-1734	LA-167	Lead Screw Bracket, RH
LP-1753	6193	Worm Bearing (14" Lathe to S/N 78626)
LP-1792	6189	Stud for Eccentric (14" Lathe)
LP-1852	LA-156	Rack Pinion Stud (To S/N 41310)
LP-1909	6169	Eccentric w/ Stud LP-1792 (14" Lathe)
Q14-01281	01281	Oilless Bearing 1/2" Lg.

HALF NUTS & CAMS

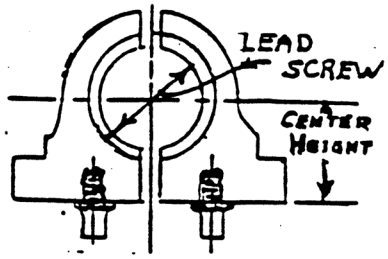

Part Number	Old Part No.	Uses Pin Type	For Lead Screw	Center Height
LP-1090	LA-352 (From S/N 20324)	Round Pin	3/4-8	0.94” (10" & 11" w/ Plain Apron)
LP-1091	LA-529	LP-1103 w/ Hex Base & 1/4-20 Hole	3/4-8	1.31” (10",11" & 2900 w/ Auto Apron)
LP-1092	2274		7/8-8	1.313 (2500 Series)
LP-1093	6178		1-1/8-8	1.313 (14" Lathes)
~~LP-1102~~	~~LA-159 (To S/N 20324)~~	~~10-32 Th'd Str. Pin~~	~~3/4-8~~	~~0.938~~
LP-1117		10-32 Th'd Str. Pin	3/4-8	0.938
LP-1466	LB-184	LP-1465	3/4-8	0.938 (9" Lathes)

Part Number	Old Part No.	Description
LP-1084	LA-354	Half Nut Cam & Shaft, 1.063 Shoulder Length
LP-1085	LA-161A	Half Nut Cam & Shaft, 1.390 Shoulder Length
LP-1084	LA-541	Half Nut Cam & Shaft, 0.945 Shoulder Length
LP-1761	6177A	Half Nut Cam & Shaft, (14" Lathe)

SADDLE, MISCELLANEOUS

(See Also "Gibs for Cross Slides", "Felt Wipers", "Tool Posts", "Crossfeed Screws", "Compound Screws", "Handwheels"

Part Number	Old Part No.	Description
LP-1079	6145	Washer
LP-1224	LA-174	Saddle Lock Nut
LP-1242	LA-571	Saddle Lock Screw, 2-3/8" Lg.
LP-1277	LA-175	Saddle Lock Screw, 1-3/4" Lg.
LP-1299	LA-744	Lock Plug
LP-1317	LA-1147	Dial Lock Screw
LP-1320	LA-1148	Dial Lock Slug (Nylon Ball)
LP-1322	LB-136	Feed Dial, 1-3/4" Dia. (See also LP-1533)
LP-1367	LA-570	Felt Washer
LP-1371	LA-181	Swivel Lock Bolt w/ Nut (12" & 14" Lathes)
LP-1372	LA-197	Stud
LP-1377	LA-1149	Dial Lock Slug
LP-1398	LA-687	Feed Dial, 1-7/32" Dia. (Use with LP-1399 or LP-1552)
LP-1399	LA-689	Crossfeed Bushing, 1-7/32" Dia. (7/8-14 Th'd) (Use with LP-LP-1398)
LP-1485	LA-745	Compound Rest Top (10” & 11” after S/N 50843)
LP-1487	LA-254	Compound Bushing, 15/16" Dia (Obsolete, Order LP-1398 & LP-1552)
LP-1488	6143	Saddle Lock Screw (14" Lathe)
LP-1489	6144	Saddle Lock (14" Lathe)
LP-1490	LB-46	Compound Rest Top (9" Lathe)
LP-1498	LA-797	Bracket for Crossfeed Screw
LP-1506	LA-172	Crossfeed Bushing, 15/16" Dia. (Obsolete, Order LP-1398 & LP-1399)
LP-1507	LA-683	Compound Rest Top (10” & 11” prior to S/N 50843)
LP-1517	LA-1164	Spring for Dial
LP-1518	LA-463	Washer for LP-1488
LP-1533	LA-1383, LB-137	Compound Bushing, 1-3/4" Dia. (11/16-16 Th'd)
LP-1552	LA-748	Compound Bushing, 1-7/32" Dia. (11/16-16 Th'd) See LP-1533 & LP-1322
LP-1574	LA-171	Feed Dial, 15/16" Dia. (Obs, Order LP-1398 & Bushing LP-1399 or LP-1552)
LP-1578	LA-746	Compound Rest Swivel
LP-1599	LA-671	Compound Rest Swivel
LP-1633	6146	Thrust Bearing
LP-1647	LA-1166	Compound Rest Top (12" Lathe)
LP-1648	2086	Compound Rest Swivel (12" Lathe)
LP-1725	6222	Thrust Bearing
LP-1726	6221	Thrust Washer
LP-1727	2089	Compound Bushing (12" Lathe)
LP-1728	LA-1170	Cross Feed Dial (12" Lathe)
LP-1729	LA-1169	Compound Bracket
LP-1737	2282	Crossfeed Bushing
LP-1738	2082	Cross Feed Dial Bracket
LP-1740	LA-180	Swivel Pin
LP-1798	2361	Stud
LP-1799	6338	Stud
LP-1800	2374	Knurled Nut
LP-1801	2356	Binding Lever
LP-1802	6337	Bed Bracket
LP-1804	7348	Cross Slide Extension
LP-1836	6211	Compound Rest Top (14" Lathe)
LP-1837	6212	Compound Rest Swivel (14" Lathe)
LP-1838	LA-747	Compound Rest Base (Cross Slide) (From S/N 50843)

SADDLE, MISCELLANEOUS Continued

Part Number	Old Part No.	Description
LP-1845	LB-64	Saddle Lock (9" Lathe)
LP-1851	LB-47	Compound Rest Swivel (9" Lathe)
LP-1903	LA-1167	Compound Rest Swivel (2900 Series Lathes)
LP-1905	7352	Compound Rest Base (Cross Slide) (14" Lathe)
LP-1928	LA-693	Cross Slide for Lever Operated Slide
LP-1929	LA-692	Cross Slide Base
LP-1931	LA-684	Chip Guard
LP-1932	2762	Compound Rest Base (Cross Slide) (2500 Series Lathes)
LP-2015	LA-691	Compound Rest Base, T-Slotted (Cross Slide)
Q10-03322	LA-198	Hardened Washer for Saddle Lock Screw

GIBS FOR CROSS SLIDES, & COMPOUND SLIDES

Part Number	Old Part No.	Description
LP-1318	LA-749	Compound Gib, Bottom, 5-11/16" Lg.
LP-1319	LA-183	Compound Gib, Top, 4-3/4" Lg.
LP-1362	LA-1159	Compound Gib, Bottom, 10" Lg.
LP-1363	LA-1176	Compound Gib, Top, 5" Lg.
LP-1365	LA-535	Front Saddle Gib (10" Lathe)
LP-1366	LA-1063	Rear Gib (Used with Gib Bar LP-1368)
LP-1368	LA-1064	Gib Bar (For LP-1366)
LP-1373	LA-182	Cross Slide Gib, 5-1/2" Lg.
LP-1410	7411	Cross Slide Gib, 12-1/4" Lg.
LP-1634	6217	Top Gib (14" Lathe)
LP-1927	LA-465	Gib for Double Tool Post Cross Slide

FELT WIPERS FOR SADDLES

Part Number	Old Part No.	Description
LP-1692	LA-293, 294	Felt Wiper Set for 10", 11", & 12" Lathes (4)
LP-1693	6138, 6140	Felt Wiper Set for 14" Lathes (4)
LP-1694	LA-290, 291, 292	Wiper Cover Set for 10", 11", & 12" Lathes (4)
LP-1695	6139, 6141	Wiper Cover Set for 14" Lathes (4)
LP-1746	7714	Front Felt Wiper for Chucker Saddle Slide
LP-1747	7715	Rear Felt Wiper for Chucker Saddle Slide

TOOL POST AND PARTS

(See also QC Toolposts on page 35)

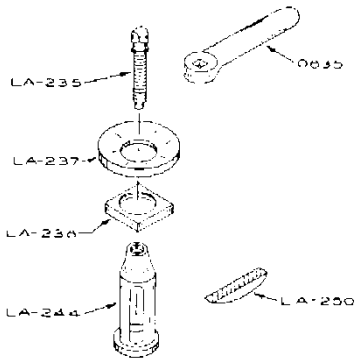

Part Number	Old Part No.	Description
LP-1315	LA-244	Tool Post
LP-1316	LA-235	Tool Post Screw
LP-1325	LA-237	Tool Post Ring
LP-1326	LA-236	Tool Post Block
LP-1346	LA-250	Tool Post Wedge
Q23-00635	0635	Tool Post Wrench
LP-1545	LA-244A	Tool Post Complete as Shown (9", 10", 11", & 12" Lathes)
LP-1869	7624	Tool Post Wedge
LP-1870	7626	Tool Post Ring
LP-1872	6234	Tool Post
LP-1873	6235	Tool Post Screw
LP-1874	6236	Tool Post Block
Q23-03617	6239	Tool Post Wrench

TOOL HOLDER BLOCKS For Double Tool Post Cross Slide

Part Number	Old Part No.	Description
LP-1504	LA-596	Front Tool Block
LP-1505	LA-595	Rear Tool Block
LP-1508	LA-461	Wedges, Pair
LP-1906	LA-466	T-Nut
LP-1923	LA-596	Front Tool Block
LP-1924	LA-595	Rear Tool Block

THREADING DIAL

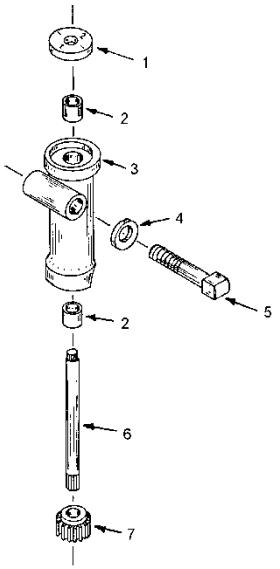

Part Number	Old Part No.	Description
LP-1241	LA-332	Mounting Screw
LP-1248	LA-1125	Dial Face, 1-1/4" Dia.
LP-1249	LA-323	Shaft
LP-1250	LA-324	Dial Gear, Straight Teeth
LP-1351	LA-1124	Dial Gear, Helical Teeth
LP-1767	LA-12-2	Threading Dial Ass'y, Complete (9”, 10” & 11” Lathes)
LP-1768	LA-322	Dial Face, 7/8" Dia.
LP-1823	6196	Threading Dial Housing (14" Lathes)
LP-1825	6195	Threading Dial Ass'y, Complete (14” Lathes)
LP-2185	LA-1122	Threading Dial Ass’y Complete (12” Lathes)
Q14-00797	0797	Oilless Bearings

TAILSTOCK SCREWS

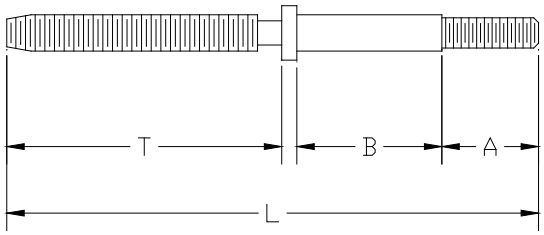

Part Number	Old Part No.	A	B	T	L	L.H. Acme Thread
LP-1143	LA-146	1.0	1.19	2-31/32	5-5/16	7/16-10
LP-1144	LA-1092	1.0	1.19	4-13/32	6-3/4	7/16-10
LP-1190	6112	1.1	1.31	6-3/16	8-19/32	5/8-10

TAILSTOCK PARTS

Part Number	Old Part No.	Description
LP-1217	LA-177	Binding Lever
LP-1222	LA-148	Screw Retainer
LP-1239	LA-147	Tailstock Spindle, 1-1/8" Dia. x 5-5/16" Lg. (#2 MT) (9" & 10" Lathes)
LP-1240	LA-151	Binding Plug
LP-1244	LA-263	Dauber
LP-1246	LA-274	Hex Nut
LP-1272	LA-1068	Retainer
LP-1278	LA-185	Binding Stud, 5/16" Dia. x 2" Lg.
LP-1297	LA-1091	Tailstock Spindle, 1-3/8" Dia. x 6-13/16" Lg. (#2 MT) (11" & 12" Lathes)
LP-1311	LA-225	Clamp
LP-1321	LA-1095	Spindle Key
LP-1323	LA-1093	Binding Stud, 5/16" Dia. x 2-3/8" Lg.
LP-1336	LA-793	Rubber Washer
LP-1357	LA-1094	Binding Plug
LP-1468	6111	Screw Retainer (14" Lathe)
LP-1469	6120	Thrust Washer (14" Lathe)
LP-1470	LA-792	Rubber Washer (14" Lathe)
LP-1486	6119	Tailstock Wrench (14" Lathe)
LP-1488	6143	Tailstock Adjusting Screw (14" Lathe)
LP-1635	6109	Tailstock Clamp (14" Lathe)
LP-1636	6122	Tailstock Nut (14" Lathe)
LP-1769	6121	Tailstock Spindle (14" Lathe)
LP-1770	6115	Binding Plug, Top (14" Lathe)
LP-1771	6116	Binding Stud (14" Lathe)
LP-1772	7117	Binding Plug, Bottom (14" Lathe)
LP-1951	6118	Spindle Key
LP-1955	6106	Tailstock Top (14" Lathe)
LP-1956	6107	Tailstock Base (14" Lathe)
Q19-00626	0626	Ball Oiler
Q23-03308	LA-176	Tailstock Wrench (10", 11", & 12" Lathes)
Q23-03575		Tailstock Wrench (9" Lathes w/ 3/4" Hex Nut)

ACCESSORIES

FACE PLATES, DRIVE PLATES, & CHUCK BACKS

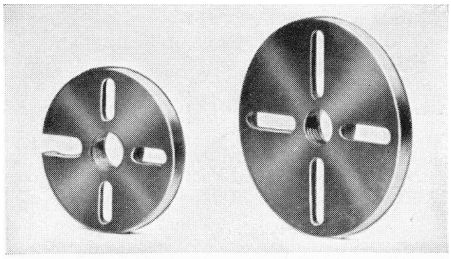

FACE PLATES

Part Number	Old Part No.	Type	Size
LP-1378	LA-170	Drive Plate	6” Dia. 1½ ”-8 Thread
LP-1383	LA-1009	Drive Plate	6” Dia. 2¼” -8 Thread
LP-2218	2307	Drive Plate	7” Dia., L-00 Spindle
LP-1385	LA-1008	Face Plate	8” Dia. 2¼” -8 Thread
LP-1866	LA-344	Face Plate	8” Dia. 1½”-8 Thread
LP-1867	2010	Face Plate	10” Dia. 2¼” -8 Thread
LP-2345	2310	Face Plate	10” Dia. L-00 Spindle
LP-1463	AC-104	Chuck Back	6-3/8” Dia. 1½”-8 Thread
LP-1464	AC-107	Chuck Back	6-3/8” Dia. 2¼” -8 Thread

(CHUCK BACKS FINISHED ON SPINDLE SIDE, SEMI-FINISHED ON FRONT)

WE RECOMMEND A TRUEING CUT BE TAKEN ON ALL PLATES AFTER INSTALLATION ON LATHE

FOLLOWER REST



FOLLOWER REST

Part Number	Old Part No.	Description
LP-2414	AC-196	For 10” or 11” Logan Lathes
LP-2415	AC-2196	For 12” Logan Lathes
LP-2416	6320	For 14” Logan Lathes
LP-2417	AC-192	Replacement Jaw for LP-2414

CENTER (STEADY) REST

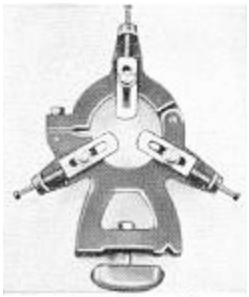

CENTER REST

Part Number	Old Part No.	Description
LP-2410	AC-189	For 10” Logan Lathes
LP-2411	AC-290	For 11” Logan Lathes
LP-2412	AC-2189	For 12” Logan Lathes
LP-2413	6315	For 14” Logan Lathes
LP-2417	AC-192	Replacement Jaw for LP-2410 or LP-2411
LP-2418	AC-193	Bed Clamp for LP-2410, LP-2411, LP-2412
LP-2427	6323	Replacement Jaw for LP-2413

TURRET PARTS

Part Number	Old Part No.	Description
LP-1686	LA-578	Turret Base Gib (Front or Back)
LP-1840	6686	Collar
LP-1853	LA-921	Tool Clamp
LP-1875	LA-412	Cam
LP-1876	LA-447	Coil Spring
LP-1877	LA-413	Cam
LP-1878	LA-985	Pilot Wheel Shaft
LP-1879	LA-984	Pinion Gear
LP-1881	LA-583	Turret Slide Gib
LP-1882	LA-990	Stop Arm
LP-1883	LA-924	Cover
LP-1884	LA-922A	Locking Post & Handle
LP-1940	LA-580	Plunger
LP-1941	LA-975	Bushing
LP-1948	LA-581	Shot Pin Bushing
Q23-03639		Turret Sleeve, 1" Dia. to #2MT

ACCESSORIES

DEAD CENTER Q23-03307 (LA-187) #2 Morse Taper (Carbide Tipped)

LIVE CENTER LP-1474 (No. 595) #2 Morse Taper Shank

ADAPTER SLEEVES - SPINDLE NOSE

Part Number	Old Part No.	Description
LP-1266	LA-1021	3° 45' to #2 Morse Taper (To Serial #52576)
LP-1330	LA-223	#3 M.T. to #2 M.T. (9" & 10" Lathes)
LP-1350	LA-1021-1	2° to #2 Morse Taper (From Serial #52576)
LP-1764	AC-160	#3AT Collet Adapter (9" & 10" Lathe)
LP-1765	AC-162	Nose Cap for 1-1/2" 8 Th'd Spindle Nose
LP-1839	6023	2° to #3 Morse Taper
LP-1842	LA-1056	Nose Cap for 2-1/4" 8 Th'd Spindle Nose
LP-1854	LA-1055	3° 45' to 5-C Collet Adapter (To Serial #52576)
LP-1855	LA-1055-1	2° to 5-C Collet Adapter (From Serial #52576)
LP-1930	6832	2° to #3 Morse Taper (For L-0 Spindles Only)

TAPER ATTACHMENT

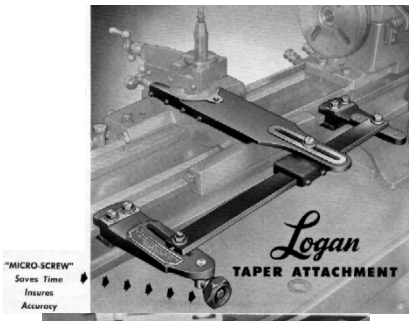

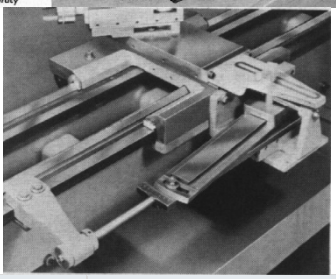

Part Number	Old Part No.	Description
LP-1502	2357	Gib for Taper Attachment, 7-1/2" Lg.
LP-1803	AC-260	Clamp
LP-1896	AC-258	Index Bracket
LP-1897	AC-257	Left Bracket
LP-1898	AC-299	Slide Block, 1-13/32" High
LP-1910	AC-298	Plain Taper Attachment, 10" Lathes
LP-1911	AC-295	Plain Taper Attachment, 11" Lathes
LP-1912	AC-2296	Plain Taper Attachment, 2500 Series Lathes
LP-1913	AC-2295	Plain Taper Attachment, 2900 Series Lathes
LP-1914	AC-270	Plain Taper Attachment, 400 & 1400 Lathes
LP-1915	AC-275	Plain Taper Attachment, 9B Series Lathes
LP-1917	AC-296	Compound Slide (From S/N 50842)
LP-1918	AC-256	Compound Slide (Up to S/N 50842)
LP-1968	AC-267	Guide Bar
LP-1969	AC-260	Clamp
LP-1970	AC-262	Feed Nut
LP-1971	AC-263	Swivel Nut
LP-1972	AC-265	Index Screw
LP-1973	AC-266	Index Knob
LP-1974	AC-264	Spacer
LP-1975	AC-269	Index Plate
LP-1986	2352	Swivel Base
LP-1987	2353	Swivel
LP-1988	2363	Swivel Lock Screw
LP-1989	2354	Slide
LP-1990	2360	Slide Lock
LP-1991	2372	Bed Bracket
LP-1992	2769	Cross Slide Extension
LP-1994	2369	Screw Housing
LP-1995	2373	Stud
LP-1996	2366	Crossfeed Sleeve Gear
LP-1997	2365	Crossfeed Bracket
LP-2001	AC-261	Gib for Slide Block

ACCESSORIES

TAPER ATTACHMENT (Continued)

Part Number	Old Part No.	Description
LP-2004	2364	Swivel Pin
LP-2005	2359	Gib for Slide Block
LP-2006	6335	Crossfeed Sleeve Gear (14" Lathe)
LP-2007	7348	Cross Slide Extension (14" Lathe)
LP-2008	6337	Bed Bracket
LP-2009	2350	Telescopic Taper Attachment Complete - 2500 Series 12" Lathe
LP-2010	6329	Telescopic Taper Attachment Complete - 6500 Series 14" Lathe
LP-2042	2370	Thrust Washer

COLLET ATTACHMENT

Part Number	Old Part No.	Description
LP-1670	AC-155	Handwheel Draw Tube (#3AT Collets)
LP-1671	AC-152	Handwheel Collet Attachment (10" Lathes)
LP-1675	AC-369-1	Finger Closer
LP-1676	AC-370	Bearing Ring
LP-1677	AC-365-1	Finger Housing
LP-1678	AC-373-1	Lock Ring (2-7/16" Dia.)
LP-1681	AC-366-1	Finger
LP-1764	AC-160	#3AT Collet Adapter (9" & 10" Lathe)
LP-1765	AC-162	Nose Cap for 1-1/2" 8 Th'd Spindle Nose
LP-1842	LA-1056	Nose Cap for 2-1/4" 8 Th'd Spindle Nose
LP-1854	LA-1055	3° 45' to 5-C Collet Adapter (To Serial #52576)
LP-1855	LA-1055-1	2° to 5-C Collet Adapter (From Serial #52576)
LP-1894	AC-164	Draw Bar Sleeve
LP-1899	AC-368	Locking Screw
LP-1900	LA-248	Spring
LP-1919	7953	Finger Housing
LP-1925	7954	Cover
LP-2000	AC-174	Draw Tube (10" Lathes w/ Production Collet)
LP-2017	LA-1052	Draw Tube (11" Lathes w/ Handwheel Collet)
LP-2019	2381	Draw Tube (12" Lathes w/ Handwheel Collet)
LP-2020	LA-1053	Tapered Bushing
LP-2021	LA-1054	Fiber Washer
LP-2022	AC-252	Handwheel (9" & 10" Lathes)
LP-2023	2396	Draw Tube (12" L-00 Lathes w/ Production Collet)
LP-2024	2636	Draw Tube (14" Lathes w/ Production Collet)
LP-2025	2391	Draw Tube (12" L-00 Lathes w/ Handwheel Collet)
LP-2032	AC-163	Fiber Washer (9" & 10" Lathes w/ Handwheel Collet)

CARRIAGE STOPS

For 9”, 10” 11” and 12” Logan Lathes (Call for stops for 14” Lathes)

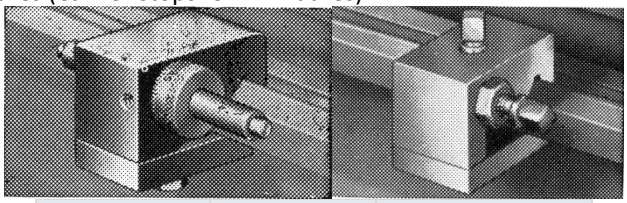

Part Number	Old Part No.	Description
LP-1624	AC-225	Single
LP-1626	AC-234	Micrometer Stop

ACCESSORIES

CHUCKS



Part Number	Chuck Size	Number of Jaws	Chuck Mount
Q23-03735	6 ¼”	3	1½ - 8
78050653	6 ¼”	3	2¼ - 8
Q23-03736	6 ¼”	3	Plain Back
Q23-03737	8”	3	Plain Back
Q23-03738	6 ¼”	3	L-00
Q23-03739	8”	3	L-00
Q23-03740	6 ¼”	3	L-0
Q23-03741	8”	3	L-0
Q23-03742	6”	4	Plain Back
Q23-03743	8”	4	Plain Back
Q23-03744	10”	4	Plain Back
Q23-03745	8”	4	L-00
Q23-03746	10”	4	L-00
Q23-03747	8”	4	L-0
Q23-03748	10”	4	L-0
Q23-03782	6”	3	“SET-TRU” Style

Plain Back Chucks require Mounting Plate, which must be finish machined on your Lathe. This insures the greatest accuracy.

Part Number	Description
LP-1463	Mounting Plate, 6-3/8” Dia, 1 ½-8 Thread
LP-1464	Mounting Plate, 6 3/8” Dia, 2 ¼-8 Thread
LP-2269	Mounting Plate for 6” “SET-TRU” style Chucks, 2¼-8 Thread
LP-2343	Mounting Plate for 6” “SET-TRU” style Chucks, 1½-8 Thread
7-876-064	Mounting Plate for 6” “SET-TRU” style Chucks, 2 3/16-10 Thread
7-879-9061	Mounting Plate for 6” “SET-TRU” style Chucks, L-00 Spindle

Many other Chucks and adapters also available – CALL/FAX/EMAIL

METRIC THREADING ON LOGAN LATHES

Must include 100 T. and 127 T. Transposing Gears (Accurate)
or may use 37 T. and 47 T. Transposing Gears (2/100 of 1% Inaccuracy)

Caution When cutting metric threads, the Half-Nut cannot be disengaged.
Reverse the spindle direction after retracting the tool at the end of the cut

	For 9", 10", 11" and 2900 Series 12" Logan Lathes	For 2500 Series 12" and 14" Logan Lathes
100 T	LP-1056	LP-1071
127 T	LP-1057	LP-1072
37 T	LP-1665	N/A
47 T	LP-1666	N/A

Lathes with Quick Change Gear Box:
MM Pitch=(40/Gearbox Setting) X (Stud Gear/Gear Box Gear)

Plain Change Lathes (without Gear Box):
MM Pitch=2.5 X (Stud Gear/Lead Screw Gear)

(Typical Diagrams on Next Page)

		QC Lathes (60T Gearbox Gear)		**Plain Change Lathes**				
	MM Pitch	Stud Gear	Gear Box Setting	Stud Gear (Driver)	Driven	Driver	Driven	Screw Gear
	0.20	48	160	32	127 (or 47)	100 (or 37)	72	100
*	0.25	48	128	40	127 (or 47)	100 (or 37)	72	100
	0.30	72	160	48	127 (or 47)	100 (or 37)	72	100
	0.35	42	80	56	127 (or 47)	100 (or 37)	72	100
	0.40	48	80	16	127 (or 47)	100 (or 37)	(none)	100
	0.45	54	80	18	127 (or 47)	100 (or 37)	(none)	100
*	0.50	48	64	20	127 (or 47)	100 (or 37)	(none)	100
	0.60	72	80	24	127 (or 47)	100 (or 37)	(none)	100
	0.65	39	40	26	127 (or 47)	100 (or 37)	(none)	100
	0.70	42	40	28	127 (or 47)	100 (or 37)	(none)	100
*	0.75	72	64	24	127 (or 47)	100 (or 37)	(none)	80
	0.80	48	40	30	127 (or 47)	100 (or 37)	(none)	100
	0.90	54	40	36	127 (or 47)	100 (or 37)	(none)	100
*	1.00	48	32	40	127 (or 47)	100 (or 37)	(none)	100
	1.20	72	40	48	127 (or 47)	100 (or 37)	(none)	100
*	1.25	60	32	40	127 (or 47)	100 (or 37)	(none)	80
	1.30	39	20	52	127 (or 47)	100 (or 37)	(none)	100
	1.40	42	20	56	127 (or 47)	100 (or 37)	(none)	100
*	1.50	72	32	48	127 (or 47)	100 (or 37)	(none)	80
*	1.75	42	16	56	127 (or 47)	100 (or 37)	(none)	80
*	2.00	48	16	32	127 (or 47)	100 (or 37)	72	40
	2.25	54	16	36	127 (or 47)	100 (or 37)	72	40
*	2.50	60	16	32	127 (or 47)	100 (or 37)	72	32
	2.75	66	16	44	127 (or 47)	100 (or 37)	72	40
*	3.00	72	16	48	127 (or 47)	100 (or 37)	72	40
*	3.50	42	8	28	127 (or 47)	100 (or 37)	72	20
*	4.00	48	8	32	127 (or 47)	100 (or 37)	72	20
*	4.50	54	8	36	127 (or 47)	100 (or 37)	72	20
*	5.00	60	8	40	127 (or 47)	100 (or 37)	72	20
*	5.50	66	8	44	127 (or 47)	100 (or 37)	72	20
*	6.00	72	8	48	127 (or 47)	100 (or 37)	72	20

Note: * indicates ISO Standard Metric Pitches.

METRIC THREADING ON LOGAN LATHES

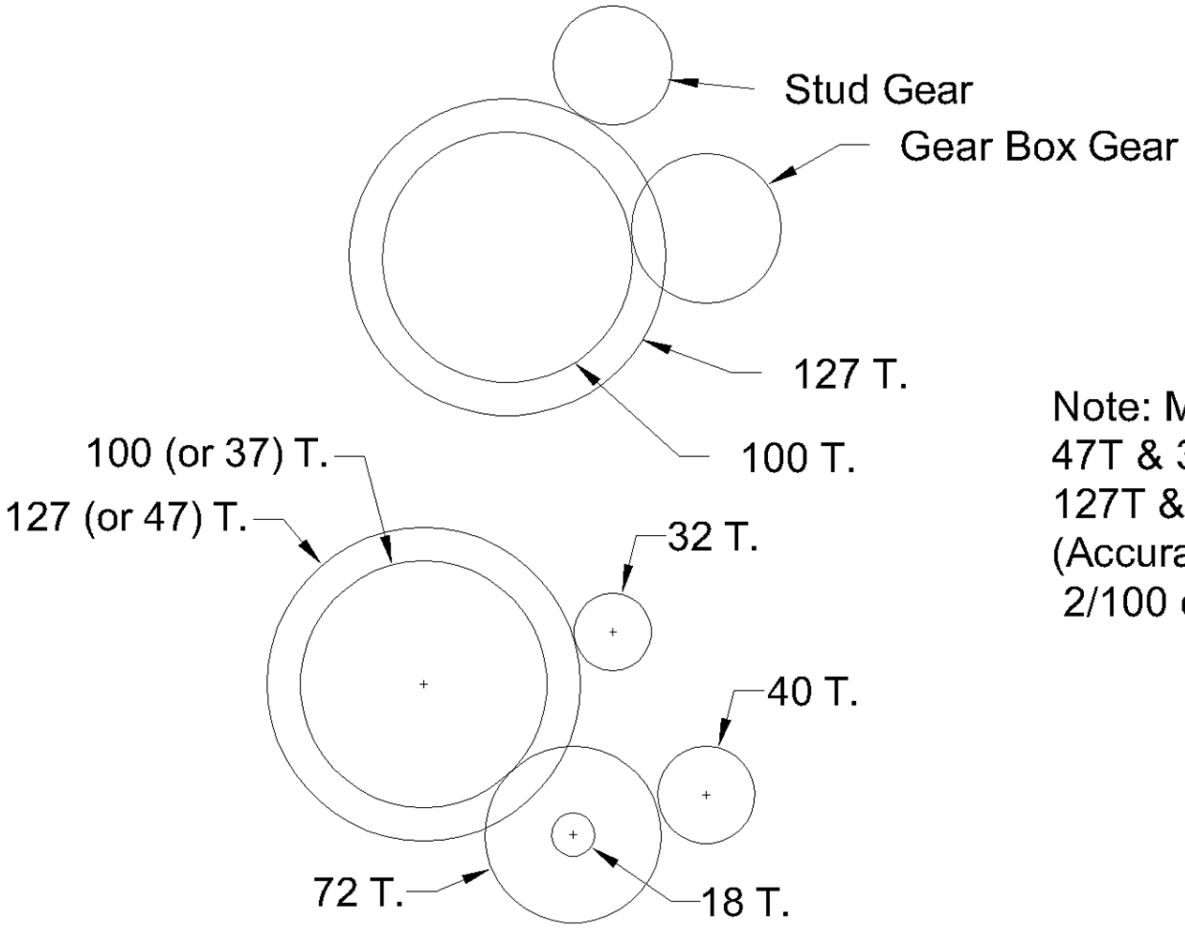

Note: May Substitute 47T & 37T Gears for 127T & 100T Gears (Accurate to Within 2/100 of 1%)

Note: For Some Pitches, May Have To Compound, Such As For 2.00 MM Pitch As Shown Above

NEW PRODUCTS!

Quick Change Tool Posts and Sets

Your choice, piston or wedge style. Piston style for economy, Wedge style for maximum rigidity and accuracy.

Both accept the industry standard toolholders, and interchange with Aloris™ and other tooling.

Exclusive from ***LOGAN ACTUATOR CO.:*** Upon request, we will machine the T-Nut to fit your LOGAN lathe at **NO ADDITIONAL CHARGE**. For lathes OTHER than Logan, a blank nut is provided which can be machined by the user to fit your T-Slot.

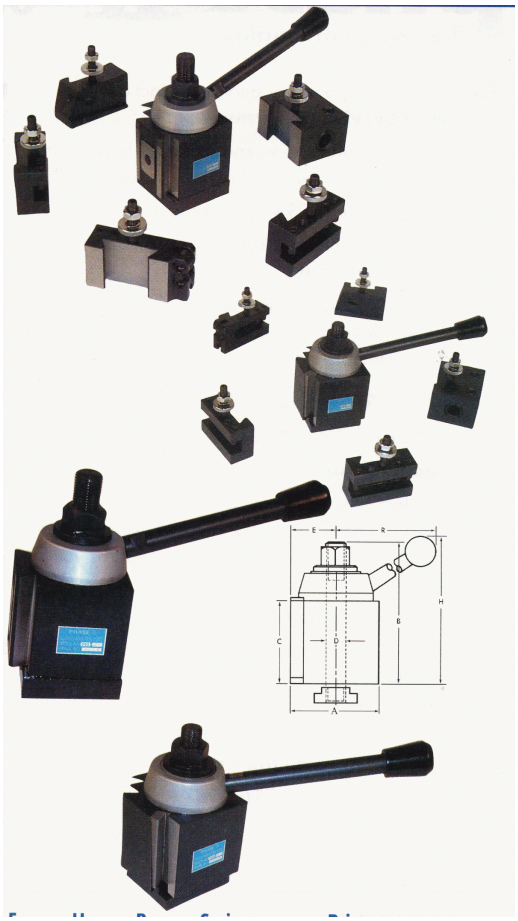

Piston Style Tool Sets

Stock #	Swing	Used on:
Q23-03786	9” to 12”	For all Logan 9” to 12” Lathes
Q23-03828	10” to 15”	For Logan 12” or 14” Lathes

Wedge Style Tool Sets

Stock #	Swing	Used on:
Q23-03827	9” to 12”	For all Logan 9” to 12” Lathes
Q23-03829	10” to 15”	For Logan 12” or 14” Lathes

All sets include Toolpost and 5 holders: 1 turning/facing (250-x01), 1 turning/facing/boring (250-x02), 1 heavy-duty boring bar (250-x04), 1 cut-off blade holder (250-x07) and 1 knurling/facing holder, including medium diamond knurls (250-x10). Replace the x with the series of your toolpost (1=100 series, 2=200 series)

Q23-03786	Q23-03827
Q23-03828	Q23-03829
PH2-250-100	PH2-250-111
PH2-250-101	PH2-250-102
PH2-250-201	PH2-250-202

Master Precision Levels

The first, and perhaps most important step in setting up a lathe to cut accurately, is to insure there is no twist in the bed. This is normally done by the use of a precision level, which must be accurate to much higher standards than a common machinist's or carpenter's level.

We now have available Master Precision Levels, graduated to 0.0005" per 10". Available in either 8" or 12" lengths, these levels are supplied in a fitted wooden case for safe storage.

Q30-03799 (8")
Q30-03800 (12")



---

5 Piece Mini Toolholder and Boring Bar Set

Q23-03823

Each Set Includes:

- A Quality Storage Case
- 4 Toolholders as Listed Below
- 1 SI-SCLCR Boring Bar
- 1 Wrench
- 2 Spare Screws
- 10 TiN Inserts
    - 4 pieces: 6-CCM-211LA CCMT
    - 4 pieces: 6-DCM-211LA DCMT
    - 2 pieces: 6-SCM-211LA SCMT



Applications:

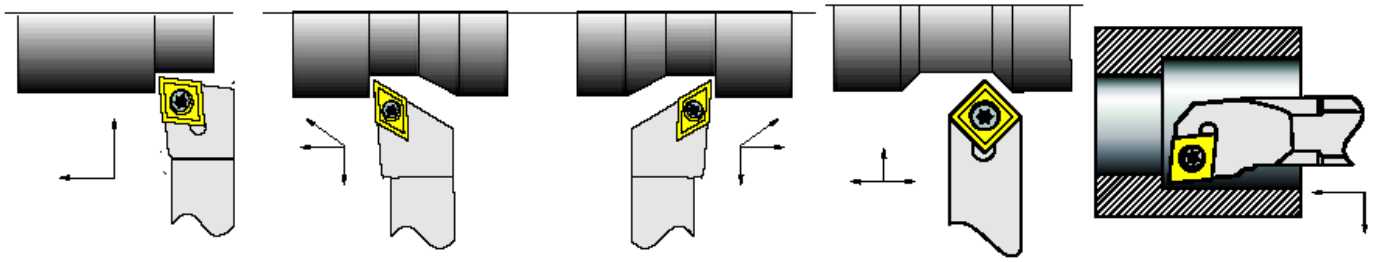

5° End or Side Cutting Edge Angle, Right Hand
6-800-042R

3° Side Cutting Edge Angle, Right Hand
6-805-042R

3° Side Cutting Edge Angle, Left Hand
6-805-042L

45° Side Cutting Edge Angle
6-810-042

5° End & Side Cutting Edge Angle, Right Hand
6-870-042R

NEW PRODUCT AVAILABILITY

5C Collet Chucks

For Mounting With Adapter Plates
6000 R.P.M.



The 5C Collet Chucks are designed for use with all 5C Collets. They can be used for turning, facing, boring, grinding and milling operations on lathes and grinding machines. The simple key operated scroll provides a uniform, distortion free clamping of workpieces and low collet exchange times. Their simple design, rugged construction and fine workmanship assure high quality and long service life.

BODY - made of high quality **FORGED STEEL.**
FORGED SCROLL - fully hardened and ground for longer life.
PINIONS - hardened and ground.
5-C adjustable collet stop for the 5C Collet Chuck are available.

Standard Accessories:
1 Chuck Wrench, 1 set of mounting bolts, 1 Hex Key.
Collets not included, available separately.

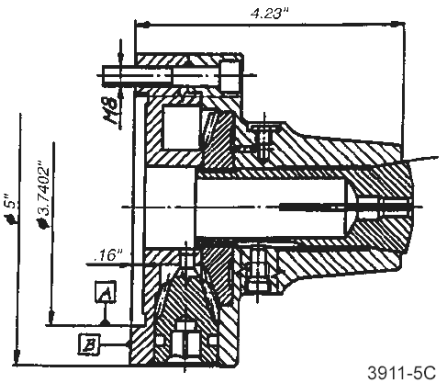

Prices

Part Number	Description	Price
7-862-0501	5” Collet Chuck, Std	
LP-1463	1½-8 Threaded Adapter	
LP-1464	2¼-8 Threaded Adapter	

Super Precision 5C Collet Chucks With Fine Adjustment

For Mounting With Adapter Plates

0.0004” T.I.R. and 6000 R.P.M.



The Super Precision 5C Collet Chucks are designed for use with all 5C collets. They can be used for turning, facing, boring, grinding and milling operations on center lathes and grinding machines. The simple key operated scroll provides a uniform, distortion free clamping of the workpiece and low collet exchange time.
Four fine adjustment screws are used to set up the chuck on its mounting plate to get precision within **.0004" T.I.R** on duplicate parts.
Outstanding accuracy, low cost, versatility and long life make BISON 5" **5-C SET-TRU** Chucks invaluable in the workshop and indispensable in the toolroom.

BODY - made of high quality **FORGED STEEL.**
FORGED SCROLL - fully hardened & ground for longer life.
PINIONS - hardened and ground.

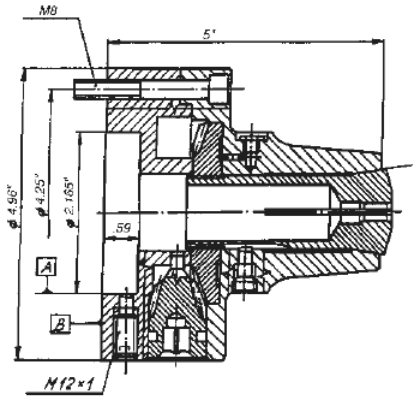

Standard Accessories:
1 Chuck Wrench, 1 set of mounting bolts, 1 Hex Key.
Collets not included, available separately.

Prices

Part Number	Description	Price
7-862-0505	5” Collet Chuck, Adj	
7-876-052	1½-8 Threaded Adapter	
7-876-056	2¼-8 Threaded Adapter	

THE FOLLOWING BOOKS ARE STILL AVAILABLE FROM STOCK!

Great instruction on the proper use of lathes in general

Running an Engine Lathe

"Practical suggestions which will give the young machinist or apprentice the foundation principles of engine lathe work."

RUNNING AN ENGINE LATHE
by Fred H. Colvin

If you're just starting out using a metal cutting lathe, or you're trying to learn techniques you feel you should have known all along, then grab this. This small, but jam-packed book will show you all the basic techniques of running a lathe.

Thirteen chapters cover the engine lathe, centering lathe work, driving the work, tools and turning, steady and follower rests, faceplate work, chucks and chucking, boring tools, taper turning, cutting screwthreads, test indicators and their use, three types of centering mandrels and care of the lathe.

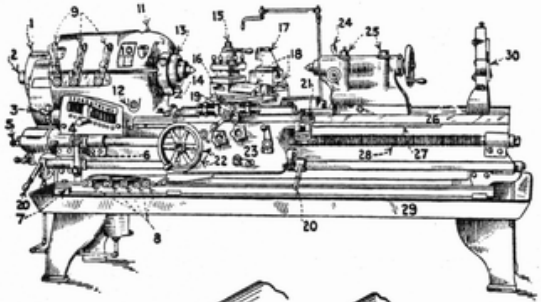

You'll learn all about essential operations in easy-to-read and understand text illustrated with simple, clear drawings. You'll learn about different kinds of dogs (not the barking type), split collars, toolholder and bits, work with shoulders, boring the end of a bar, home-made follower rest, saving a poor casting, bridle for faceplate work, slotted chucks for flat work, precision drilling, boring cylinders, ways of figuring tapers, rapid thread cutting, cutting a double or triple thread, cutting Brown & Sharpe worm threads, using dial indicators, and much, much more.

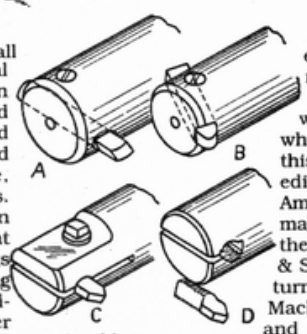

There are many tables describing tapers, V threads, square threads, ACME threads, grinding angles on many different tools, and more.

The author was an old man when he authored this in 1941. He was editor emeritus of American Machinist magazine, and was the Colvin of Colvin & Stanley fame that turned out American Machinist handbook and countless texts. The man was an expert machinist.

Here's a great little book at a great little price that you can't afford not to have, especially if you consider yourself a beginner on a lathe. Excellent book! Bargain price.

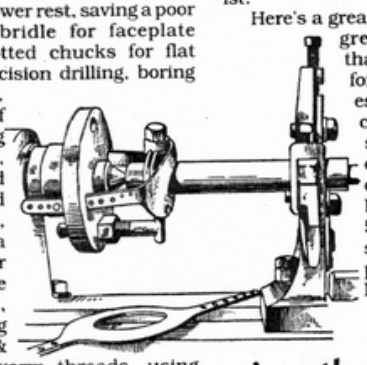

5 1/2 X 8 1/2 softcover 117 pages
No. 4708
$6.95

Another Great Book from "Mr. Machinist"

Lathe Operations

"Hands-on" Lathe Education!



Fig. 4. Set the tool on center so that the cutting edge is exactly parallel with the sloping side of the thread. Take a light cut, barely enough to true up the surface. It is well to use either cutting oil or cutting compound.

LATHE OPERATIONS
by J. W. Barritt
reprinted by Lindsay Publications

If you've seen Shaper Operation or Planer Operations then you know what this about.

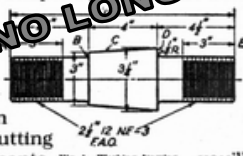

Fig. 1. Working drawing.

You get a brief introduction to the lathe, cutting speeds and lubricants, cutting tools and their use, and then you get detailed step-by-step lessons.

You'll learn about grinding centers, aligning tailstock center to a test bar, machining a steel pin, machining a steel shaft, machining a forged steel shaft, machining a forged steel rotor, machining a forged steel gear and spindle, machining a forged steel roll, machining a spotfacing bar (for Morse and Brown & Sharpe Tapers), and Machining a Tool Steel Lathe Center.

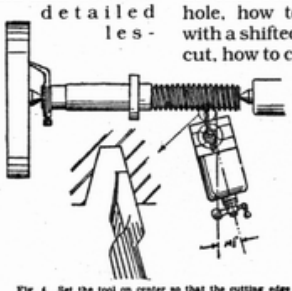

Fig. 4. Set the tool on center so that the cutting edge is exactly parallel with the sloping side of the thread. Take a light cut, barely enough to true up the surface. It is well to use either cutting oil or cutting compound.

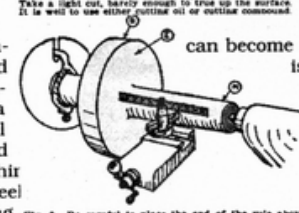

Fig. 3. Be careful to place the end of the rule above the base of the fillet, and be sure to make allowance for the metal left for finishing side E.

After a straight-to-the-point discussion of screw cutting, you'll learn the secrets of machining a forged steel body-bound bolt, machining a machine steel taper bolt, machining a tool steel screw, machining a machine steel worm, and more. When you're done with these lessons, you'll be able to cut a quadruple 1/4" pitch, 1" lead Brown & Sharpe RH thread, a 4-pitch right hand single Buttress thread, left-hand Whitworth thread, a 29° A[illegible] screw thread, and on [illegible]

And the lessons continue. Machine a cast iron hand wheel, a cast iron gear, worm, cylinder head, a cast steel trunnion, a brass spacing washer, a brass taper sleeve, a cast-iron packing box bushing, and many more.

Within these lessons you'll learn to machine a dovetail surface, ream a taper hole, how to center a casting with a shifted core, how to under cut, how to cut an internal taper thread, how to use a steady rest and pot chuck, machine a crankshaft, and much more.

Here's a machine shop course you can take at your own speed. Combine this with several other quality books from this catalog, and you can become an expert machinist. If this were published today, it would probably cost you at least twice our price. And how much of this has changed since 1937? Zilch.

Get a copy of this. It's quality. You'll like it. Worth having.

8 1/2 x 11 softcover about 176 pages
No. 21109 $13.95

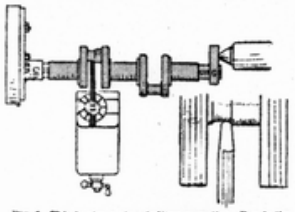

Fig. 5. This is also a slow tedious operation. Due to the long overhang of the tool, it is necessary to take light cuts and light feeds. When setting the tool, place it well above center. It is well to have the work in the position shown when setting the tool for the overhang. When turning very large shafts, it is customary to brace the end of the tool.

Fifty one detailed, educational projects!

OUT OF PRINT
NO LONGER AVAILABLE

PARTS AND ACCESSORIES FOR LOGAN LATHES • ENGINEERING SPECIALTIES

T-SHIRTS

6.1 oz all cotton Navy T-Shirt, emblazoned with the Logan Logo on the back and on the front, show off your love of Logan Lathes with a picture of a classic Logan Lathe.
And keep our favorite reminder close to your heart,
Measure Twice, Cut Once!



$18.00 each
Sizes Large, X-Large, XXL and 3XL
Machine Wash Cold to preserve the screenprinting



LOGAN ACTUATOR CO.
550 Chippewa Rd
Harvard Illinois 60033

Tel (815) 943-9500

http://www.lathe.com
E-Mail: sales@lathe.com